Dimensions and weights

Dimensions										
Tire size	A	B	C	D	E	A	B	C	D	E
385/65 D22.5	7307 mm (287.7 in)	5939 mm (233.8 in)	5526 mm (217.6 in)	5318 mm (209.4 in)	2647 mm (104.2 in)	5210 mm (205.1 in)	3606 mm (142.0 in)	3175 mm (125 in)	2856 mm (112.4 in)	2068 mm (81.4 in)
	Two-wheel steer (radius)					Four-wheel steer (radius)				

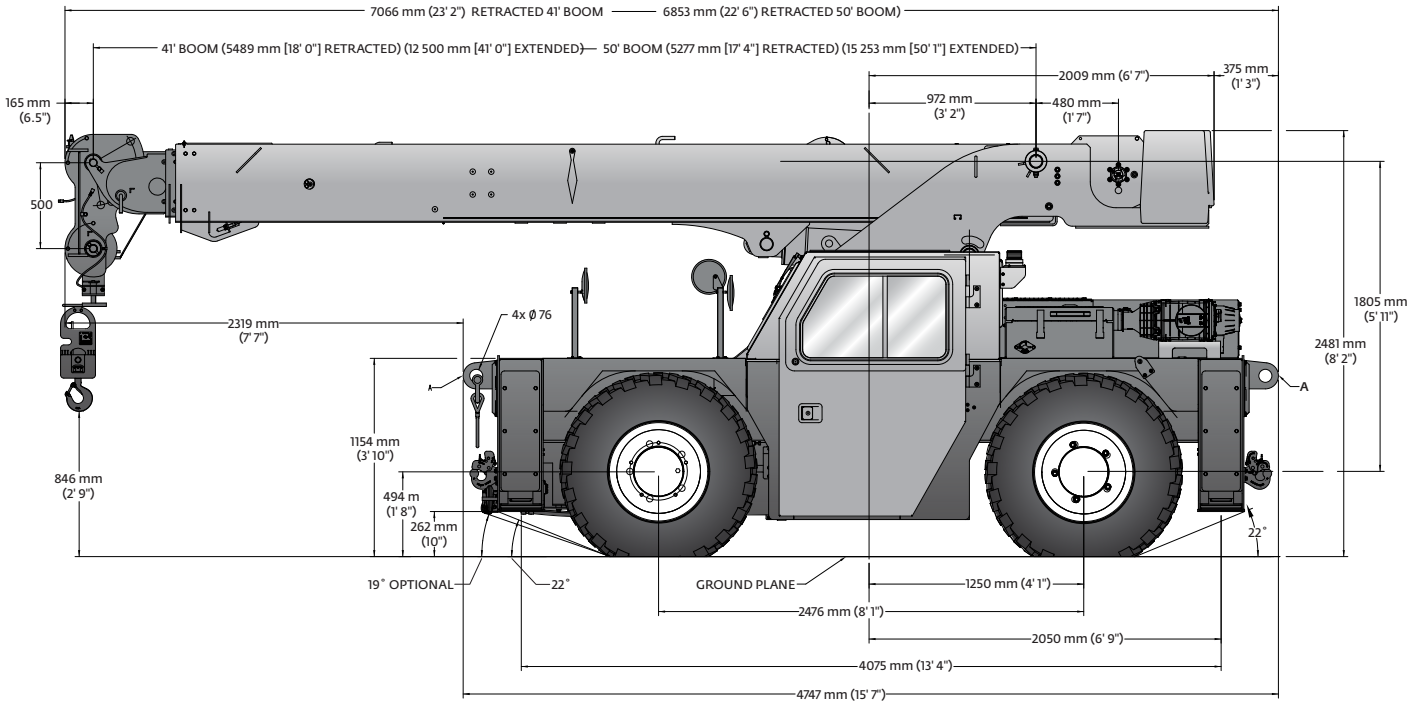

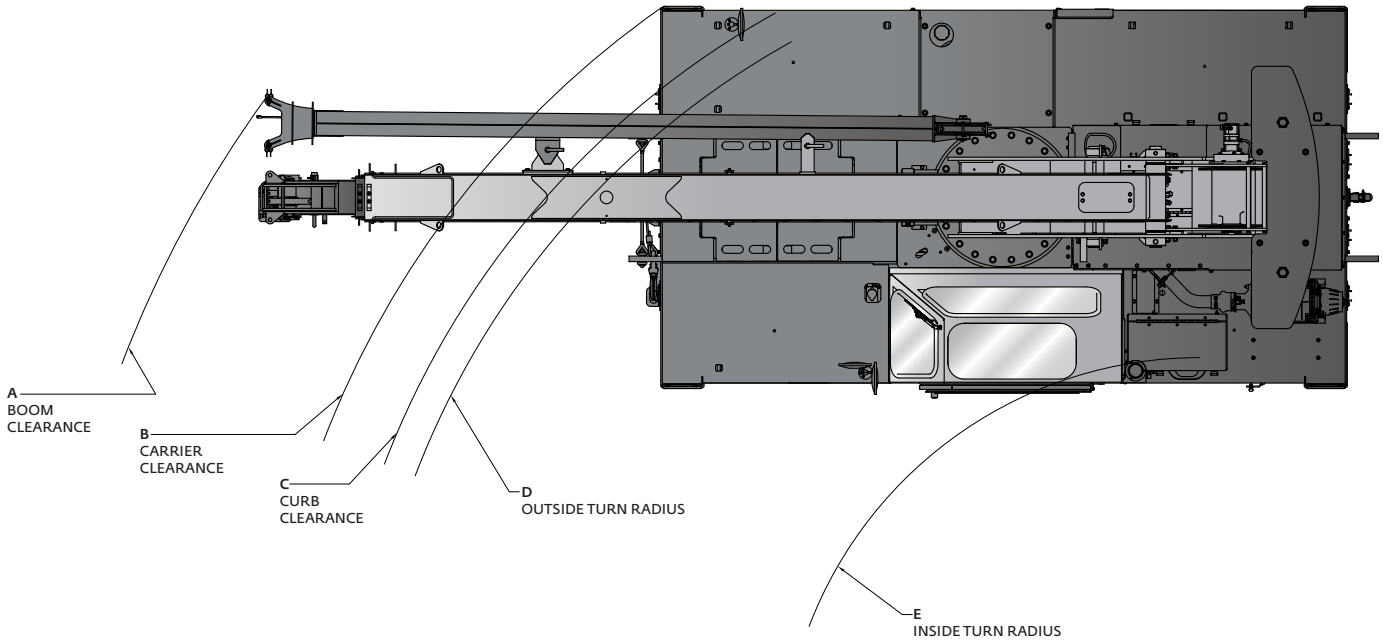

Dimensions and weights

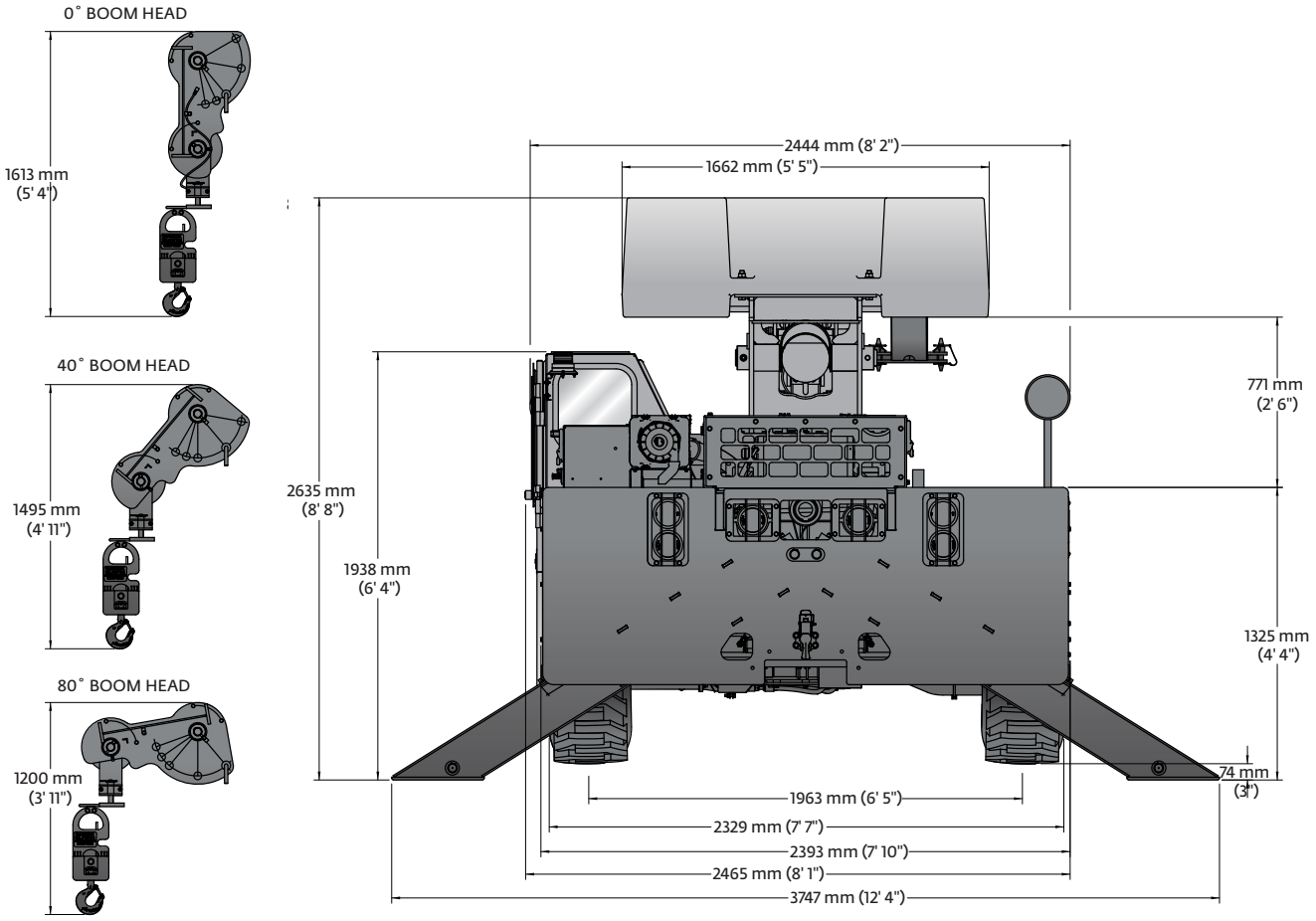

Weights						
	GVW		Front		Rear	
	kg	lb	kg	lb	kg	lb
Basic machine: including 12,5 m (41.0 ft) main boom, hoist with 72 m (235 ft) of wire rope, 18 t (20 USt) hook block, counterweight, Tier 4 engine, and driver.	11 489	25,329	5328	11,747	6161	13,582
Add: 4,6 m (15 ft) fixed swingaway extension and extension carrier brackets and downhaul weight.	245	540	375	828	-130	-287
Crane weight	11 734	25,869	5704	12,574	6030	13,295
Basic machine: including 12,5 m (41.0 ft) main boom, main hoist with 72 m (235 ft) of wire rope, 18 t (20 USt) hook block, full counterweight, Tier 4 engine, and driver.	11 489	25,329	5328	11,747	6161	13,582
Add: Enclosed cab with heater and defroster.	89	196	41	90	48	106
Crane weight	11 578	25,525	5369	11,838	6209	13,687