Dimensions

Dimensions					
Tire Size	A	B	C	D	E
Two-wheel steer	7407 mm (291.6 in)	6675 mm (262.8 in)	6218 mm (244.8 in)	6058 mm (238.5 in)	3375 mm (133 in)
Four-wheel steer	5380 mm (212 in)	4481 mm (176 in)	3993 mm (157 in)	3841 mm (151 in)	1722 mm (68 in)

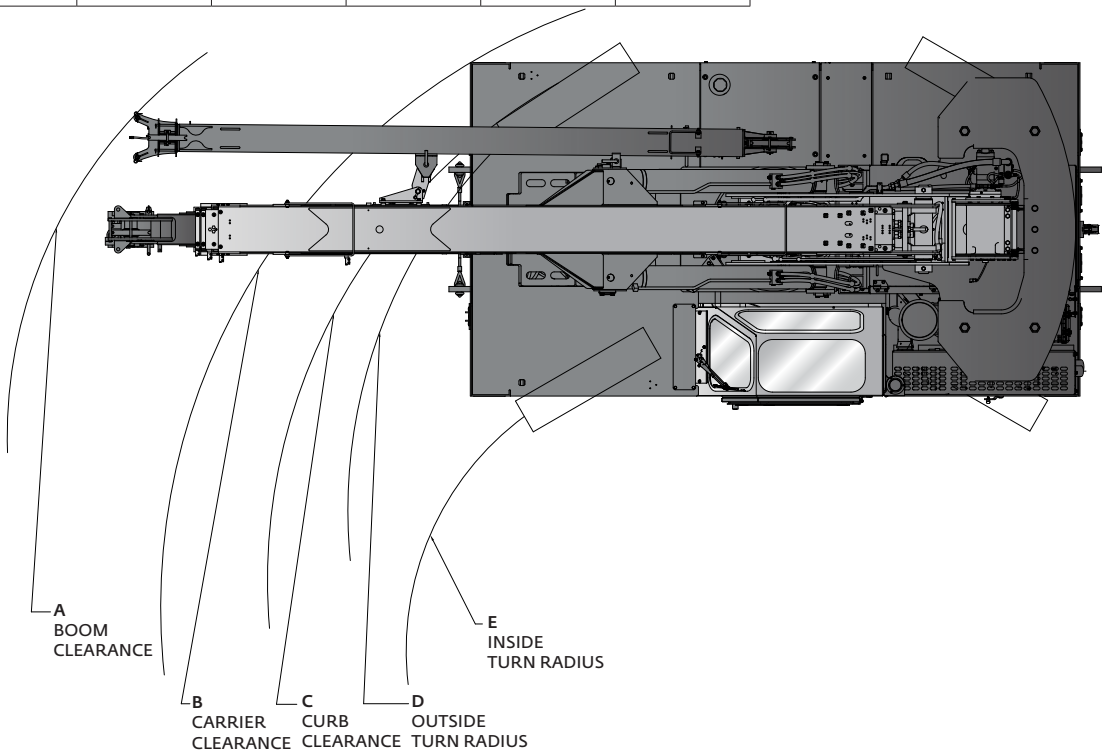

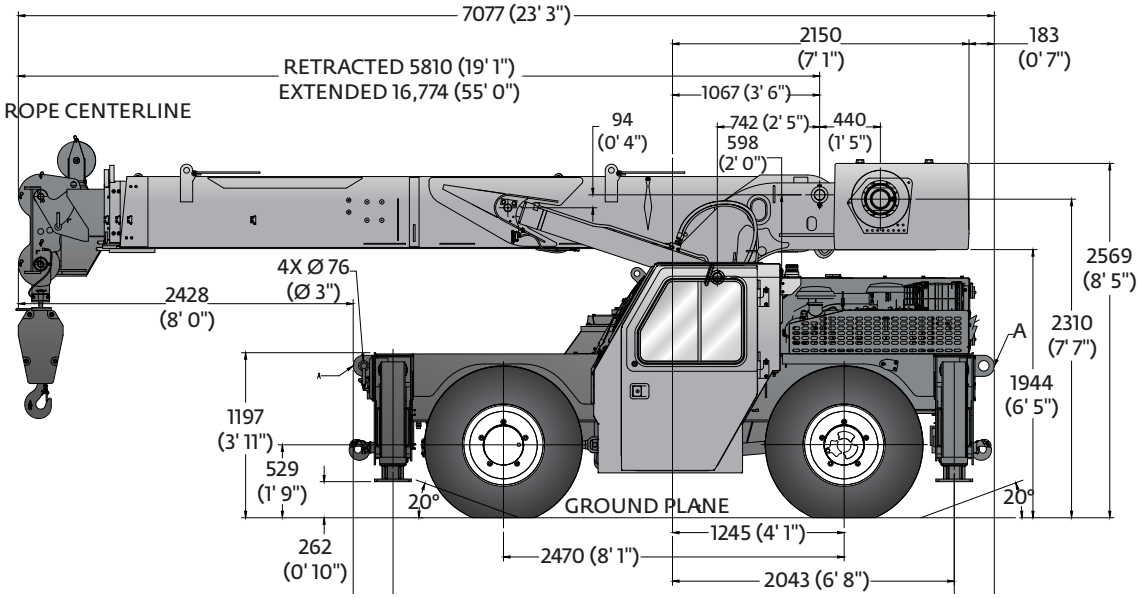

Dimensions and weights

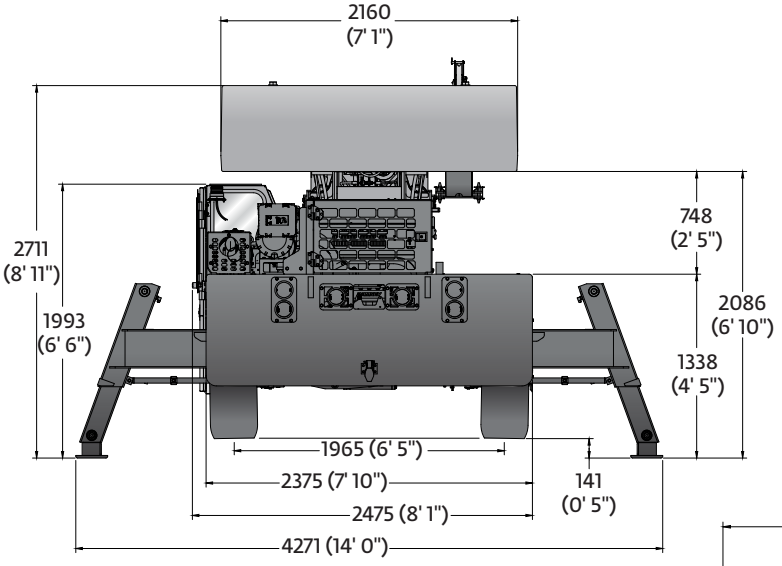

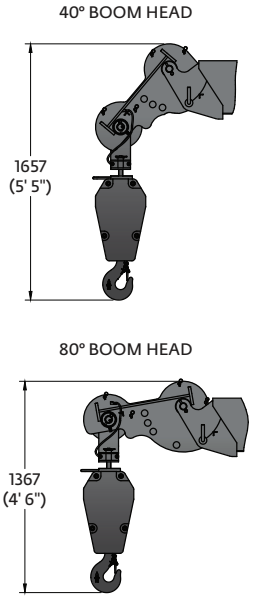

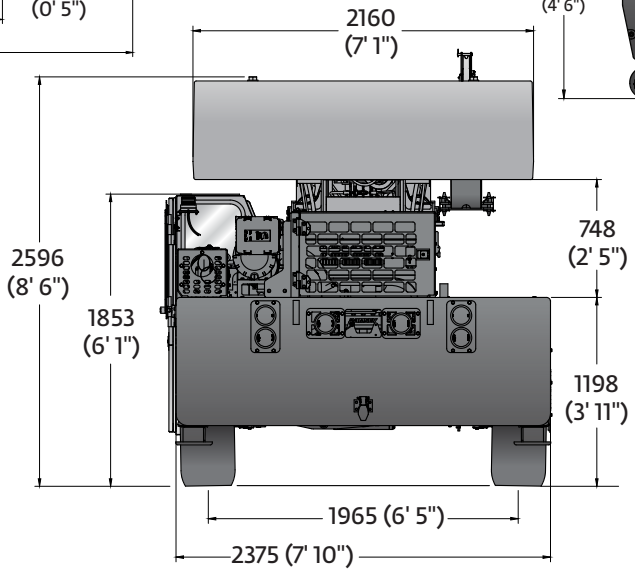

Weights

	GVW		Front		Rear	
	kg	lb	kg	lb	kg	lb
Basic machine: Including 16,6 m (54.5 ft) main boom, main hoist with 97,5 m (320 ft) of wire rope, 18 t (20 USt) hook block, full counterweight, Tier IV engine	16 680	36,774	6236	13,747	10 445	23,027
Add: 4,6 m (15 ft) fixed swingaway extension and extension carrier brackets and downhaul weight	179	394	291	641	-112	-247
Crane weight	16 859	37,168	6527	14,388	10 333	22,780
Basic machine including 16,6 m (54.5 ft) main boom, main hoist with 97,5 m (320 ft) of wire rope, 18 t (20 USt) hook block, full counterweight, Tier IV engine	16 680	36,774	6236	13,747	10 445	23,027
Add: Enclosed cab, heater and glass	89	197	40	89	49	108
Crane weight	16 769	36,971	6276	13,836	10 494	23,135
Basic machine: Including 16,6 m (54.5 ft) main boom, main hoist with 97,5 m (320 ft) of wire rope, 18 t (20 USt) hook block, full counterweight, Tier IV engine	16 680	36,774	6236	13,747	10 445	23,027
Add: 4,6 m - 7,6 m (15 ft - 25 ft) telescopic swingaway extension and extension carrier brackets and downhaul weight	324	714	489	1079	-166	-365
Crane weight	17 004	37,488	6725	14,826	10 279	22,662